North American Electric

PESS143TC1.5M-2-RB

WASHDOWN DUTY MOTOR
NEMA PREMIUM EFFICIENCY
STAINLESS STEEL CONSTRUCTION - ROUND BODY (C-FLANGE FOOTLESS)
TOTALLY ENCLOSED FAN COOLED - IP66 CONSTRUCTION
INVERTER DUTY 10:1 CT; 20:1 VT - NEMA MG1 PART 31

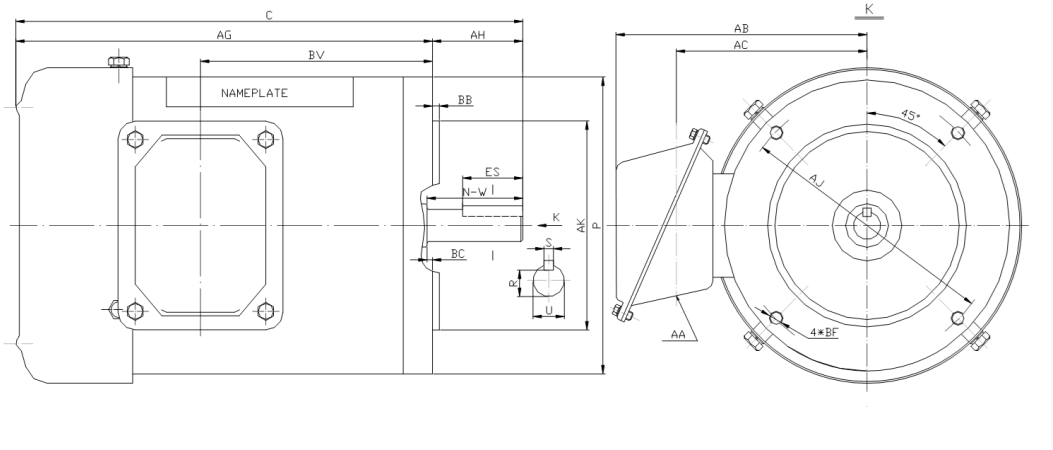

DIMENSIONS

HP	RPM	Frame	MOUNTING									
			C	P	AH	AJ	AK	AG	BA	BB	BC	BF
1.5	3600	143TC	12.63	6.5	2.12	5.875	4.5	10.51	NA	0.16	0.12	4*3/8-16

Shaft Extension, Key Set					Conduit Box			
U	R	S	ES	N-W	AA	AB	AC	BV
0.875	0.771	0.188	1.41	2.25	0.86	5.75	4.25	6.3

Bearings		Mount
DE	ODE	
6205-2RS	6205-2RS	F1

BEARING LUBRICATIONS: The sealed bearings come lubricated with NEVASTANE XS 80 Grease which complies with FDA Chapter 21 CFR 178.3570

ISO9001 CERTIFIED CE NEMA Premium C US

PO Box 130 350 Vaiden Drive Hernando, MS 38632-0130
Phone: 662-429-8049 Fax: 662-429-8546 Toll Free: 800-884-0404 www.naemotors.com

North American Electric

PESS143TC1.5M-2-RB

WASHDOWN DUTY MOTOR
NEMA PREMIUM EFFICIENCY
STAINLESS STEEL CONSTRUCTION - ROUND BODY (C-FLANGE FOOTLESS)
TOTALLY ENCLOSED FAN COOLED - IP66 CONSTRUCTION
INVERTER DUTY 10:1 CT; 20:1 VT - NEMA MG1 PART 31

PERFORMANCE DATA

HP	RPM	Frame	Voltage	Frequency (Hz)	Full Load S.F.	Insulation Class	NEMA Design	Slip (%)	NEMA Code	Enclosure Type	IP Rating	Max. Ambient
1.5	3480	143TC	230/460	60	1.15	F	B	3.3	K	TEFC	66	40° C

Amps (460V)		Efficiency (%)			Power Factor			Torque (ft-lb)			DE Bearing	ODE Bearing	Connection	Weight (lbs.)
FLA	LRA	100%	75%	50%	100%	75%	50%	FLT	LRT %	BDT %				
2	20	84.0	78.0	74.0	0.86	0.82	0.73	2.3	285	300	6205-2RS	6205-2RS	9 Lead 2Y/Y	39

**Usable at 208 Volts*

NAME PLATE

North American Electric

THREE PHASE AC INDUCTION MOTOR
INVERTER DUTY 20:1 VT; 10:1 CT

Hernando, MS 38632

Model :	PESS143TC1.5M-2-RB			IP	66	FRAME	143TC	LB/WT	39
HZ	60	S.F.	1.15	HZ	50	S.F.	1.0	NEMA DESIGN	B
HP	1.5	RPM	3480	HP	1.5	RPM	2865	ENCL. TEFC	INS F
VOLTS	230/460			VOLTS	190/380			DUTY CONT	AMB 40° C
AMPS	4/2			AMPS	4.8/2.4			DE BRG	6205-2RS
CODE	K	P.F.	0.86	CODE	K	P.F.	0.88	ODE BRG	6205-2RS
EFF	84.0	MIN	81.5	EFF	81.5	MIN	78.5	SER NO.	

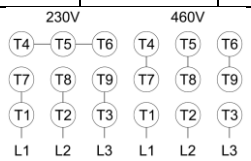

CE C US 272709 E310089 CC082A

MADE IN CHINA

Factory Certified for T2B
Div 2. Class I, Gr. A , B , C & D
and Class II, Gr. F & G

APPLICATIONS:

Applications include washdown applications, food processing, chemical processing,pharmaceuticals, poultry processing, meat processing, dairy applications, bakeries, snack foods, bottling and extremely corrosive environments.

PO Box 130 350 Vaiden Drive Hernando, MS 38632-0130
Phone: 662-429-8049 Fax: 662-429-8546 Toll Free: 800-884-0404 www.naemotors.com